未注线性尺寸公差 Liner dimension tolerances						
0~6	6~10	>10~30	>30~60	>60~100	>100~160	>160
±0.2	±0.3	±0.5	±0.7	±1.0	±1.3	±1.6

REV	DESCRIPTION	DRW.	DATE
A	RELEASE		

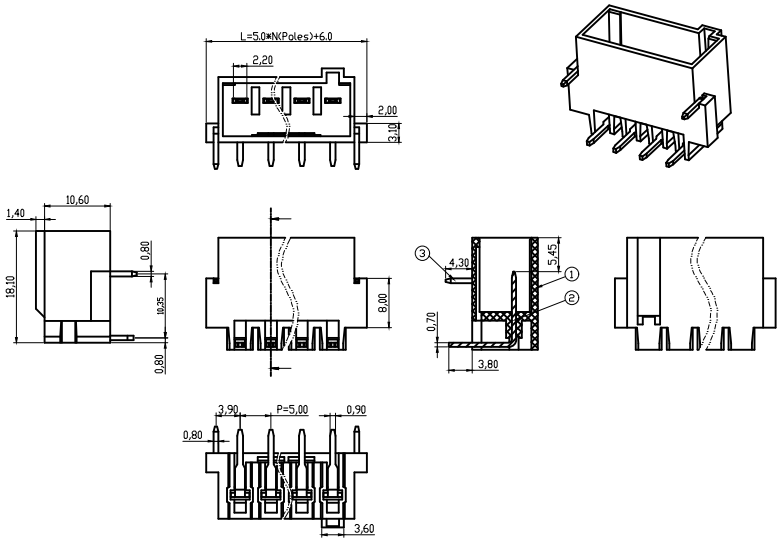

UL 技术参数 UL Technical Data			
等级 Use Group	B	C	D
额定电压 Rated Voltage [V]	300	/	300
额定电流 Rated Current [A]	15	/	10
耐电压 Withstanding Voltage [V]	AC 2000V/1Min		
IEC 技术参数 IEC Technical Data			
过压类别 Overvoltage Category	III	III	II
污染等级 Contamination Class	3	2	2
额定电压 Rated Voltage [V]	250	320	630
额定电流 Rated Current [A]	16	16	16
冲击电压 Rate Impulse Voltage [KV]	4	4	4
一般参数 Other Data			
线径范围 Wire Range [AWG/mm²]	/		
剥线长度 Stripping length [mm]	/		
位数范围 Poles	02～04P		
工作温度 Operating temperature [℃]	-40 ～ +105		
螺钉/扭力 Screw / Torque /lbf.in	/		
环保要求 RoHS Compliant	YES		

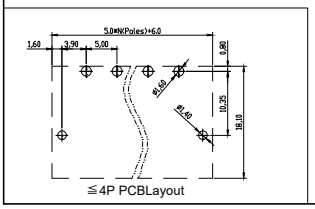

≦4P PCBLayout

ITEM	NAME	MATERIAL	NOTES
3	Pin Header2	BRASS	SN Plated
2	Pin Header1	BRASS	Gold Plating
1	Housing	PBT+GF30%	UL94-V0

TYPE CUSTOMER DRAWING 客户图档		PROJECTION		赋安连电气 FORANY ELECTRIC
DRFT	刘秀海	DATE 2026.03.15	UNITS: MM	TITLE PL2.5S-XX-5.0-06 (四位及以下)
CHKD	曾裕辉	DATE 2026.03.15	SCALE: 1:1	DWG NO.
APPD	陈柏林	DATE 2026.03.15	SHEET 1 OF 1	

未注线性尺寸公差 Liner dimension tolerances						
0~6	6~10	>10~30	>30~60	>60~100	>100~160	>160
±0.2	±0.3	±0.5	±0.7	±1.0	±1.3	±1.6

REV	DESCRIPTION	DRW.	DATE
A	RELEASE		

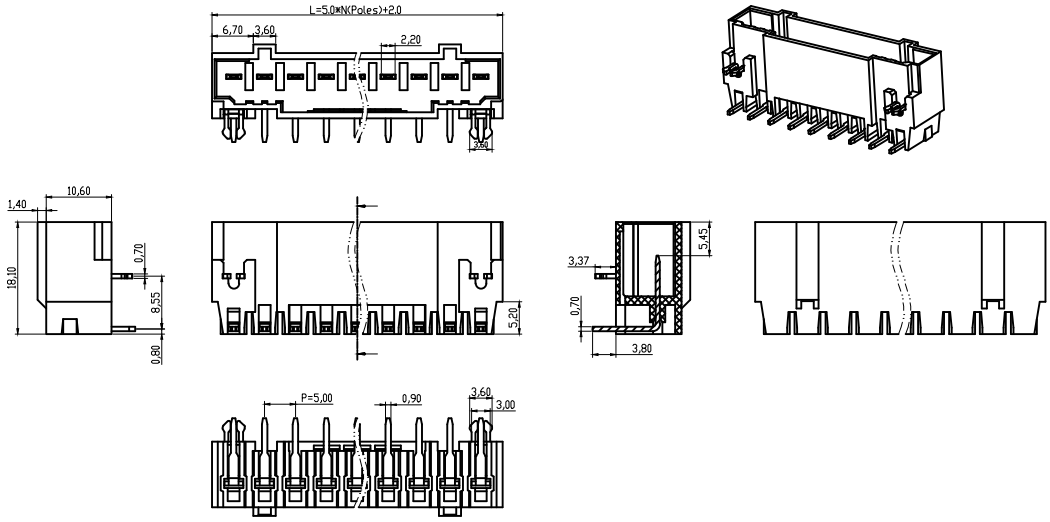

UL 技术参数 UL Technical Data			
等级 Use Group	B	C	D
额定电压 Rated Voltage [V]	300	/	300
额定电流 Rated Current [A]	15	/	10
耐电压 Withstanding Voltage [V]	AC 2000V/1Min		
IEC 技术参数 IEC Technical Data			
过压类别 Overvoltage Category	III	III	II
污染等级 Contamination Class	3	2	2
额定电压 Rated Voltage [V]	250	320	630
额定电流 Rated Current [A]	16	16	16
冲击电压 Rate Impulse Voltage [KV]	4	4	4
一般参数 Other Data			
线径范围 Wire Range [AWG/mm²]	/		
剥线长度 Stripping length [mm]	/		
位数范围 Poles	05～15P		
工作温度 Operating temperature [℃]	-40 ～ +105		
螺钉/扭力 Screw / Torque /lbf.in	/		
环保要求 RoHS Compliant	YES		

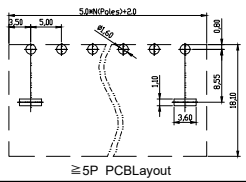

≧5P PCBLayout

ITEM	NAME	MATERIAL	NOTES
3	Latch	BRASS	SN Plated
2	Pin Header	BRASS	Gold Plating
1	Housing	PBT+GF30%	UL94-V0

TYPE CUSTOMER DRAWING 客户图档		PROJECTION		赋安连电气 FORANY ELECTRIC
DRFT	刘秀海	DATE 2026.03.15	UNITS: MM	TITLE L2.5S-XX-5.0-06(五位及以上)
CHKD	曾裕辉	DATE 2026.03.15	SCALE: 1:1	DWG NO.
APPD	陈柏林	DATE 2026.03.15	SHEET 1 OF 1	