未注线性尺寸公差 Liner dimension tolerances						
0~6	6~10	>10~30	>30~60	>60~100	>100~160	>160
±0.2	±0.3	±0.5	±0.7	±1.0	±1.3	±1.6

REV	DESCRIPTION	DRW.	DATE
A	RELEASE		

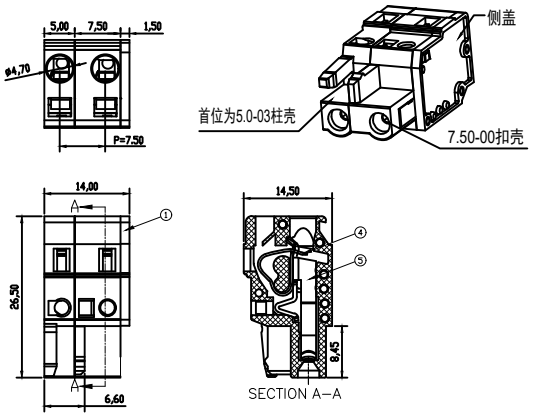

UL 技术参数
UL Technical Data

等级	Use Group	B	C	D
额定电压	Rated Voltage [V]	300	/	300
额定电流	Rated Current [A]	15	/	10
耐电压	Withstanding Voltage [V]	AC 2500V/1Min		

IEC 技术参数
IEC Technical Data

过压类别	Overvoltage Category	III	III	II
污染等级	Contamination Class	3	2	2
额定电压	Rated Voltage [V]	500	630	1000
额定电流	Rated Current [A]	18	18	18
冲击电压	Rate Impulse Voltage [KV]	6	6	6

一般参数 Other Data

线径范围	Wire Range [AWG/mm²]	28~12/0.2~2.5
剥线长度	Stripping length [mm]	9-11
位数范围	Poles	02～24P
工作温度	Operating temperature [℃]	-40 ～ +105
螺钉/扭力	Screw / Torque /lbf.in	/
环保要求	RoHS Compliant	YES

ITEM	NAME	MATERIAL	NOTES
5	Clamp Sheet	C5191	SN Plated
4	Spring	SUS301	/
3	Housing 2	PA66	UL94-V0
2	Housing 1	PA66	UL94-V0
1	Cover	PA66	UL94-V0

TYPE CUSTOMER DRAWING 客户图纸		PROJECTION			赋安连电气 FORANY ELECTRIC
DRFT	刘秀海	DATE	2026.03.15	UNITS: MM	TITLE PL2.5B-02-7.50-00
CHKD	曾裕辉	DATE	2026.03.15	SCALE: 1:1	DWG NO.
APPD	陈柏林	DATE	2026.03.15	SHEET 1 OF 1	

未注线性尺寸公差 Liner dimension tolerances						
0~6	6~10	>10~30	>30~60	>60~100	>100~160	>160
±0.2	±0.3	±0.5	±0.7	±1.0	±1.3	±1.6

REV	DESCRIPTION	DRW.	DATE
A	RELEASE		

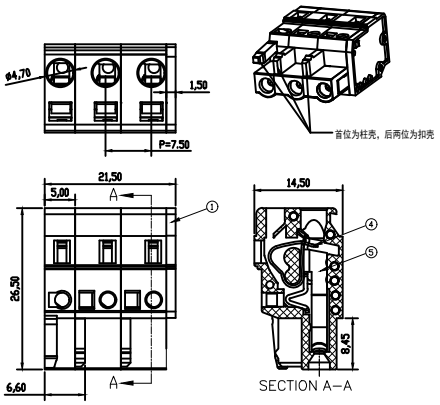

UL 技术参数
UL Technical Data

等级	Use Group	B	C	D
额定电压	Rated Voltage [V]	300	/	300
额定电流	Rated Current [A]	15	/	10
耐电压	Withstanding Voltage [V]	AC 2500V/1Min		

IEC 技术参数
IEC Technical Data

过压类别	Overvoltage Category	III	III	II
污染等级	Contamination Class	3	2	2
额定电压	Rated Voltage [V]	500	630	1000
额定电流	Rated Current [A]	18	18	18
冲击电压	Rate Impulse Voltage [KV]	6	6	6

一般参数 Other Data

线径范围	Wire Range [AWG/mm²]	28~12/0.2~2.5
剥线长度	Stripping length [mm]	9-11
位数范围	Poles	02～24P
工作温度	Operating temperature [℃]	-40 ～ +105
螺钉/扭力	Screw / Torque /lbf.in	/
环保要求	RoHS Compliant	YES

ITEM	NAME	MATERIAL	NOTES
5	Clamp Sheet	C5191	SN Plated
4	Spring	SUS301	/
3	Housing 2	PA66	UL94-V0
2	Housing 1	PA66	UL94-V0
1	Cover	PA66	UL94-V0

TYPE CUSTOMER DRAWING 客户图纸		PROJECTION			赋安连电气 FORANY ELECTRIC
DRFT	刘秀海	DATE	2026.03.15	UNITS: MM	TITLE PL2.5B-03-7.50-00
CHKD	曾裕辉	DATE	2026.03.15	SCALE: 1:1	DWG NO.
APPD	陈柏林	DATE	2026.03.15	SHEET 1 OF 1	

未注线性尺寸公差 Liner dimension tolerances						
0~6	6~10	>10~30	>30~60	>60~100	>100~160	>160
±0.2	±0.3	±0.5	±0.7	±1.0	±1.3	±1.6

REV	DESCRIPTION	DRW.	DATE
A	RELEASE		

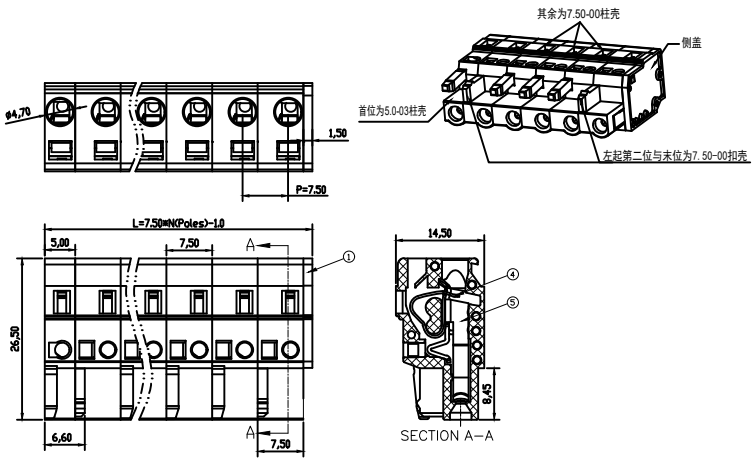

UL 技术参数
UL Technical Data

等级	Use Group	B	C	D
额定电压	Rated Voltage [V]	300	/	300
额定电流	Rated Current [A]	15	/	10
耐电压	Withstanding Voltage [V]	AC 2500V/1Min		

IEC 技术参数
IEC Technical Data

过压类别	Overvoltage Category	III	III	II
污染等级	Contamination Class	3	2	2
额定电压	Rated Voltage [V]	500	630	1000
额定电流	Rated Current [A]	18	18	18
冲击电压	Rate Impulse Voltage [KV]	6	6	6

一般参数 Other Data

线径范围	Wire Range [AWG/mm²]	28~12/0.2~2.5
剥线长度	Stripping length [mm]	9-11
位数范围	Poles	02～24P
工作温度	Operating temperature [℃]	-40 ～ +105
螺钉/扭力	Screw / Torque /lbf.in	/
环保要求	RoHS Compliant	YES

ITEM	NAME	MATERIAL	NOTES
6	Clamp Sheet	C5191	SN Plated
5	Spring	SUS301	/
4	Housing 3	PA66	UL94-V0
3	Housing 2	PA66	UL94-V0
2	Housing 1	PA66	UL94-V0
1	Cover	PA66	UL94-V0

TYPE CUSTOMER DRAWING 客户图纸		PROJECTION			赋安连电气 FORANY ELECTRIC
DRFT	刘秀海	DATE	2026.03.15	UNITS: MM	TITLE PL2.5B-XX-7.50-00(≥4P)
CHKD	曾裕辉	DATE	2026.03.15	SCALE: 1:1	DWG NO.
APPD	陈柏林	DATE	2026.03.15	SHEET 1 OF 1	