| 未注线性尺寸公差 Liner dimension tolerances(m级) | | | | |
|---|---|---|---|---|
| 0~3 | 3~6 | 6~30 | 30~120 | 120~400 |
| ±0.2 | ±0.3 | ±0.4 | ±0.55 | ±0.7 |

| REV | ECN | DESCRIPTION | DRW. | DATE |
|---|---|---|---|---|
| A | | RELEASE | zyh | 20250625 |

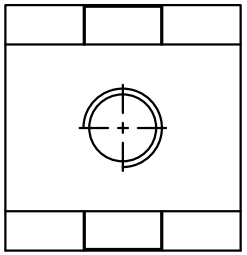

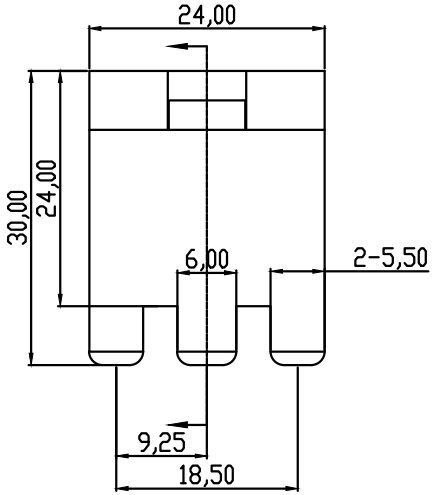


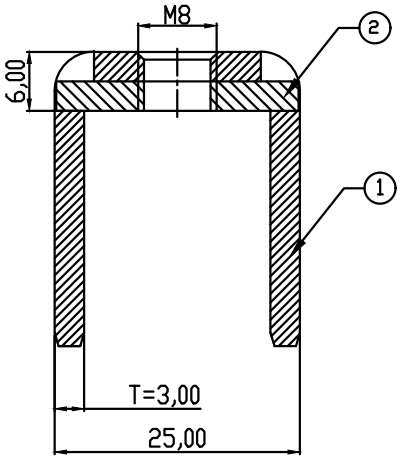


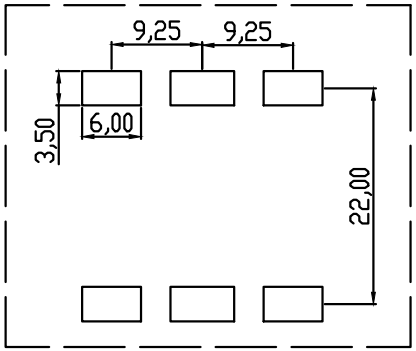


PCB LAYOUT

| | | | |
|---|---|---|---|
| 额定电流 | Rated Current | [A] | 400 |
| 螺纹/扭力 | Screw/Torque(Max) | [lbf.in] | M8/48 |
| 环保要求 | RoHS Compliant | | YES |

| ITEM | NAME | MATERIAL | NOTES |
|---|---|---|---|
| 2 | Spacer | Stainless steel | Tin Plated |
| 1 | Terminal | Copper | Tin Plated |

| | | | | | |
|---|---|---|---|---|---|
| TYPE CUSTOMER DRAWING 客户图档 | | PROJECTION | | | 赋安连电气 FORANY ELECTRIC |
| DRFT | 刘秀海 | DATE | 2026.03.15 | UNITS: MM | TITLE MT68010DE |
| CHKD | 曾裕辉 | DATE | 2026.03.15 | SCALE: 1:1 | DWG NO. |
| APPD | 陈柏林 | DATE | 2026.03.15 | SHEET 1 OF 1 | |