未注线性尺寸公差 Liner dimension tolerances(m级)				
0~3	3~6	6~30	30~120	120~400
±0.2	±0.3	±0.4	±0.55	±0.7

REV	ECN	DESCRIPTION	DRW.	DATE
A		RELEASE	zyh	20250625

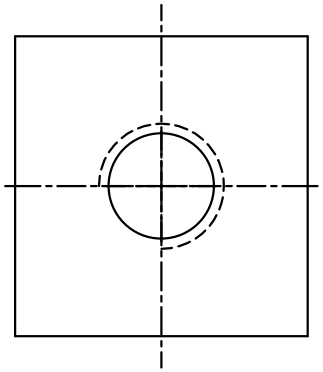

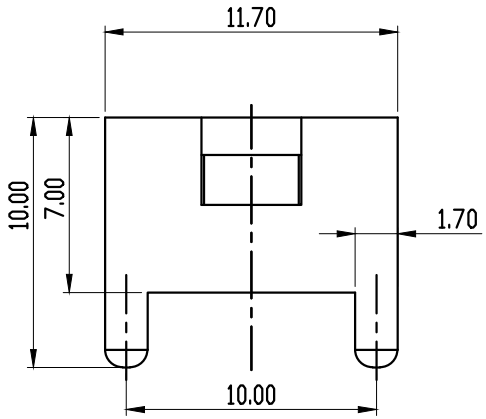

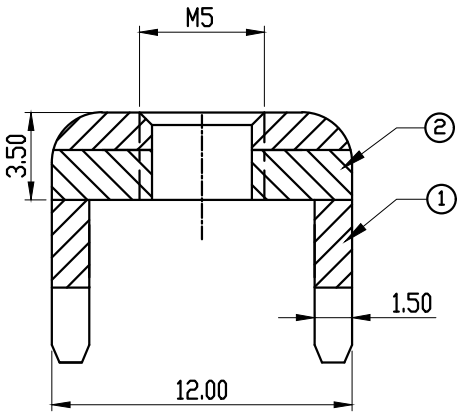

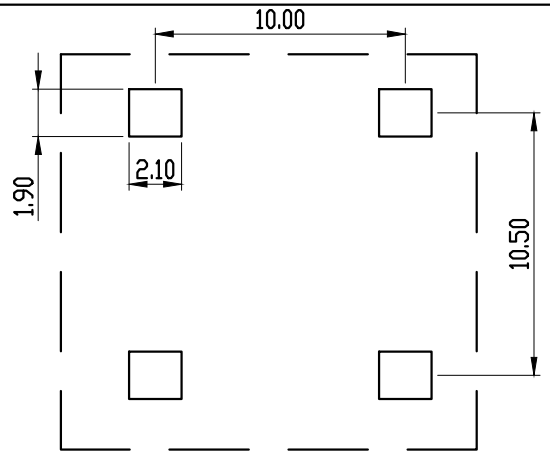

PCB LAYOUT

额定电流	Rated Current	[A]	80
螺纹/扭力	Screw/Torque(Max)	[lbf.in]	M5/18
环保要求	RoHS Compliant		YES

ITEM	NAME	MATERIAL	NOTES
2	Spacer	Stainless steel	Tin Plated
1	Terminal	Brass	Tin Plated

TYPE CUSTOMER DRAWING 客户图档		PROJECTION			赋安连电气 FORANY ELECTRIC
DRFT	刘秀海	DATE	2026.06.20	UNITS: MM	TITLE MT45005DB
CHKD	曾裕辉	DATE	2026.06.20	SCALE: 1:1	DWG NO.
APPD	陈柏林	DATE	2026.06.20	SHEET 1 OF 1	