未注线性尺寸公差 Liner dimension tolerances						
0~6	6~10	>10~30	>30~60	>60~100	>100~160	>160
±0.2	±0.3	±0.5	±0.7	±1.0	±1.3	±1.6

REV	DESCRIPTION	DRW.	DATE
A	RELEASE		

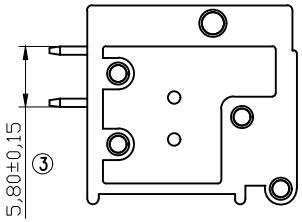

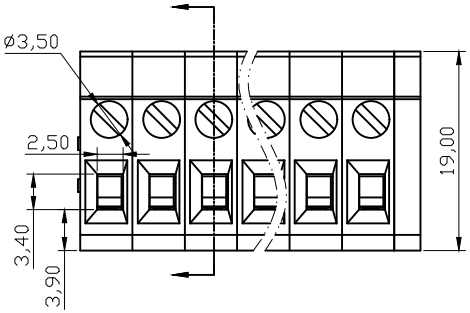

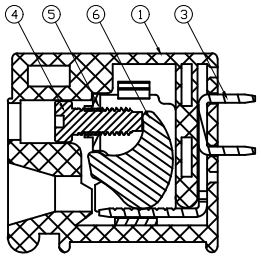

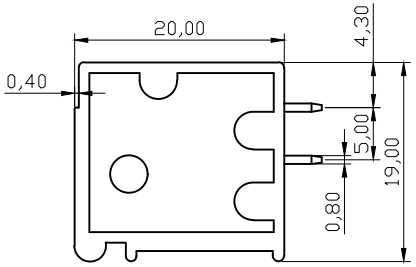

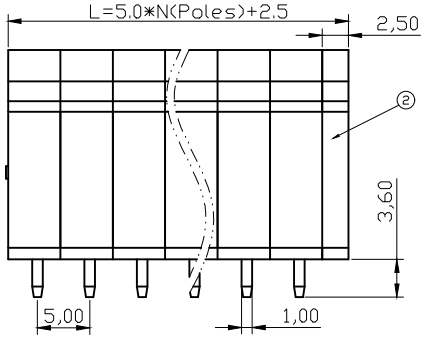

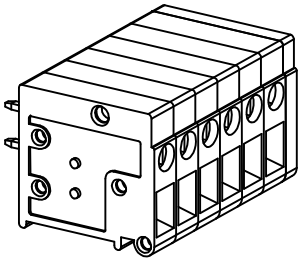

UL 技术参数 UL Technical Data				
等级	Use Group	B	C	D
额定电压	Rated Voltage [V]	300	/	300
额定电流	Rated Current [A]	20	/	10
耐电压	Withstanding Voltage [V]	AC 2000V/1Min		
IEC 技术参数 IEC Technical Data				
过压类别	Overvoltage Category	III	III	II
污染等级	Contamination Class	3	2	2
额定电压	Rated Voltage [V]	250	400	500
额定电流	Rated Current [A]	24	24	24
冲击电压	Rate Impulse Voltage [KV]	4	4	4
一般参数 Other Data				
线径范围	Wire Range [AWG/mm²]	30～12/0.2～2.5		
剥线长度	Stripping length [mm]	11～12		
位数范围	Poles	01～24P		
工作温度	Operating temperature [°C]	-40 ～ +105		
螺钉/扭力	Screw / Torque /lbf.in	M2.5/4		
环保要求	RoHS Compliant	YES		

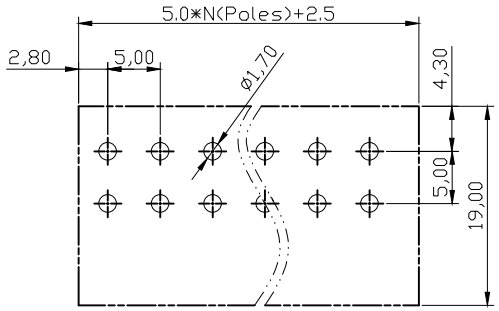

PCB Layout

ITEM	NAME	MATERIAL	NOTES
6	Spring	Steel	Zn Plated
5	Clamp Cage	Steel	Zn Plated
4	Screw	Steel	Zn Plated
3	Pin Header	Brass	SN Plated
2	Cover	PA66	UL94-V0
1	Housing	PA66	UL94-V0

TYPE CUSTOMER DRAWING 客户图档		PROJECTION			赋安连电气 FORANY ELECTRIC
DRFT	刘秀海	DATE	2026.05.18	UNITS: MM	TITLE EU1.5-XX-5.0-08-S1X
CHKD	曾裕辉	DATE	2026.05.18	SCALE: 1:1	DWG NO.
APPD	陈柏林	DATE	2026.05.18	SHEET 1 OF 1	